ACTUATECH
ACTUATOR TECHNOLOGY

Actuator datasheet

# GS2880F16

Modification reserved. Rev.date 05.2021.
No guarantee for accuracy.
Older data sheets are invalid

COMPANY WITH MANAGEMENT SYSTEM CERTIFIED BY DNV GL
= ISO 9001 =
= ISO 14001 =

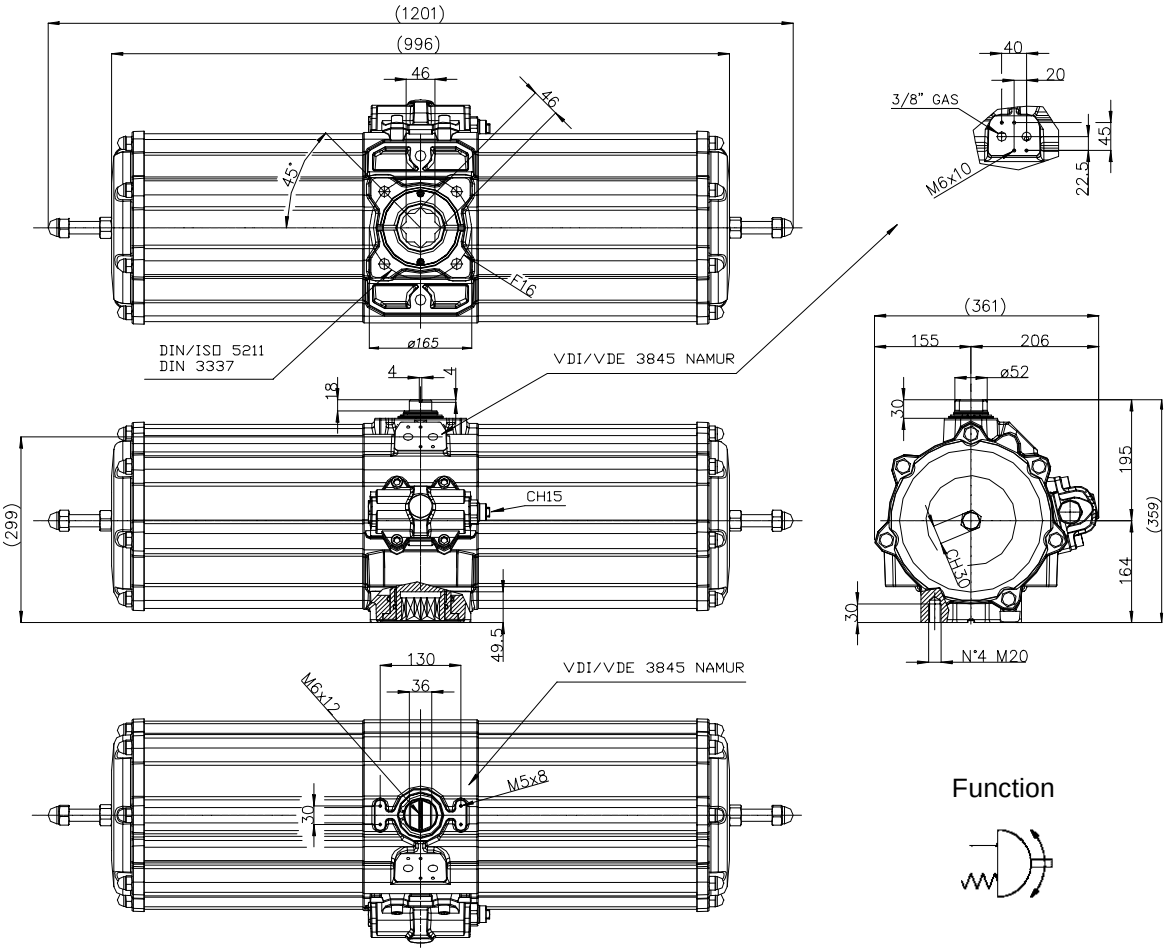


Function



**Spring return Actuators Normally Closed (N.C.)- Output Torque related to rotation angle , in Nm**
**( 0°valve closed 90° valve open )**

| Spring Torque | | | | Air pressure supply in bar | | | | | | | | | | | | | | | | | | | | | | | | | | | | | | |
|---|---|---|---|---|---|---|---|---|---|---|---|---|---|---|---|---|---|---|---|---|---|---|---|---|---|---|---|---|---|---|---|---|---|---|
| SIZE | 0° | 50° | 90° | 2,4 | | | 2,8 | | | 3 | | | 3,5 | | | 4,2 | | | 5 | | | 5,6 | | | 6 | | | 7 | | | 8 | | |
| | | | | 0° | 50° | 90° | 0° | 50° | 90° | 0° | 50° | 90° | 0° | 50° | 90° | 0° | 50° | 90° | 0° | 50° | 90° | 0° | 50° | 90° | 0° | 50° | 90° | 0° | 50° | 90° | 0° | 50° | 90° |
| 2,8 | 960 | 720 | 1440 | 1097 | 514 | 617 | 1440 | 720 | 960 | 1611 | 823 | 1131 | 2040 | 1080 | 1560 | 2640 | 1440 | 2160 | | | | | | | | | | | | | | | |
| 3,5 | 1200 | 900 | 1800 | | | | | | | 1371 | 643 | 771 | 1800 | 900 | 1200 | 2400 | 1260 | 1800 | 3086 | 1671 | 2486 | 3600 | 1980 | 3000 | | | | | | | | | |
| 4,2 | 1440 | 1080 | 2160 | | | | | | | | | | 1560 | 720 | 840 | 2160 | 1080 | 1440 | 2846 | 1491 | 2126 | 3360 | 1800 | 2640 | 3703 | 2006 | 2983 | 4560 | 2520 | 3840 | 5417 | 3034 | 4697 |
| 5,6 | 1920 | 1440 | 2880 | | | | | | | | | | | | | | | | 2366 | 1131 | 1406 | 2880 | 1440 | 1920 | 3223 | 1646 | 2263 | 4080 | 2160 | 3120 | 4937 | 2674 | 3977 |

## Technical Data

| Max Pressure | ** Min Pressure | Rotation | Stroke Adjustment | Screw Stroke Adjustment | *Moving time (sec.) | | Operating temperature (°C) |
|---|---|---|---|---|---|---|---|
| | | | | | Opening | Closing | |
| 8.4 bar | 2.4 bar | 100°<br>-5° +95° | 10 ° | For 1° drive<br>Need 9/8 turn screw | 9 | 11 | Standard –20°C +80°C<br>High temperature –20°C +150°C<br>Low temperature –50°C +60°C |

| Weight Kg | Chamber Ø (mm) | Air volume L/cycle | Maximum flange torque values |
|---|---|---|---|
| 117 | 240 | 20.06 | F16 = 4000 Nm |

*The moving time could vary on different operating and installation factors.
****Attention: "Low Temperature" version is not available with 2.8 spring torque size and the Min Pressure is 3.5 bar.**

**Operating Medium**
The operating medium shall have a dew point equal to– 20 °C or, to be at least, 10 °C below the ambient temperature (ISO 85731, Class 3).The maximum particle size shall not exceed 40 µm (ISO 8573-1, Class 5).

**ACTUATECH S.p.A.**
Via San Lorenzo, 70 - 25069 Villa Carcina (BS) – ITALY Tel. (+39) 0308908142 Fax (+39) 0308908143
http://www.actuatech.com e-mail: actuatech@actuatech.com