ACTUATECH
ACTUATOR TECHNOLOGY

Actuator datasheet

GS4000F25

Modification reserved. Rev.date 05.2021.
No guarantee for accuracy.
Older data sheets are invalid

COMPANY WITH MANAGEMENT SYSTEM CERTIFIED BY DNV GL
= ISO 9001 =
= ISO 14001 =

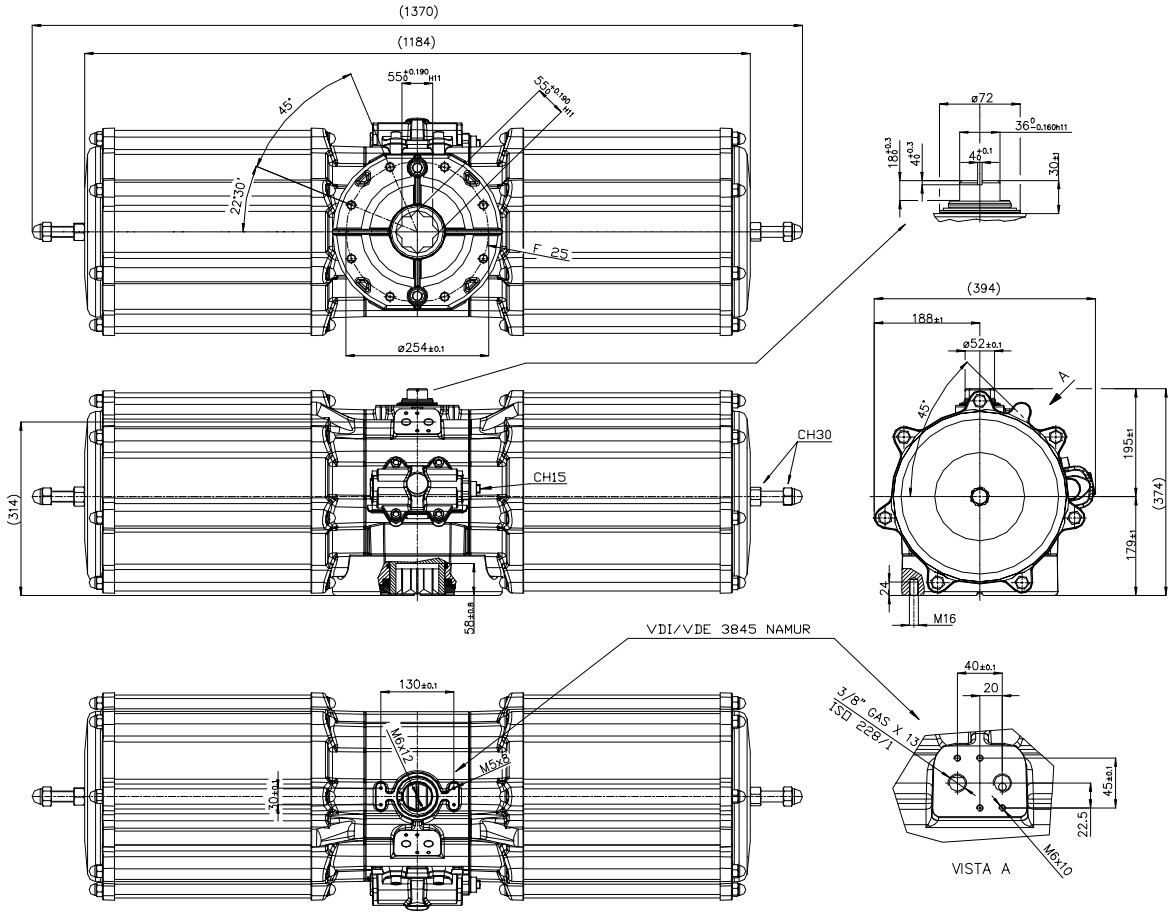

Function

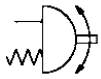

Spring return Actuators Normally Closed (N.C.)- Output Torque related to rotation angle , in Nm (0°valve closed 90° valve open)																																	
Spring Torque				Air pressure supply in bar																													
SIZE	0°	50°	90°	2,4			2,8			3			3,5			4,2			5			5,6			6			7			8		
				0°	50°	90°	0°	50°	90°	0°	50°	90°	0°	50°	90°	0°	50°	90°	0°	50°	90°	0°	50°	90°	0°	50°	90°	0°	50°	90°	0°	50°	90°
2,8	1333	1000	2000	1524	714	857	2000	1000	1333	2238	1143	1571	2833	1500	2166	3666	2000	2999															
3,5	1666	1250	2500							1905	893	1071	2500	1250	1666	3333	1750	2499	4285	2321	3451	5000	2750	4166									
4,2	1999	1500	3000										2167	1000	1166	3000	1500	1999	3952	2071	2951	4666	2500	3665	5143	2786	4141	6333	3500	5332	7523	4214	6522
5,6	2666	2000	4000																3286	1571	1952	4000	2000	2666	4476	2286	3142	5666	3000	4332	6857	3714	5523

Technical Data

Max Pressure	** Min Pressure	Rotation	Stroke Adjustment	Screw Stroke Adjustment	*Moving time (sec.)		Operating temperature (°C)
					Opening	Closing	
8.4 bar	2.4 bar	100° -5° +95°	10 °	For 1° drive Need 9/8 turn screw	12	13	Standard –20°C +80°C High temperature –20°C +150°C Low temperature –50°C +60°C

Weight Kg	Chamber Ø (mm)	Air volume L/cycle	Maximum flange torque values
183	290	27.73	F25 = 8000 Nm

*The moving time could vary on different operating and installation factors.
Attention: "Low Temperature" version is not available with 2.8 spring torque size and the Min Pressure is 3.5 bar.

Operating Medium
The operating medium shall have a dew point equal to– 20 °C or, to be at least, 10 °C below the ambient temperature (ISO 85731, Class 3).The maximum particle size shall not exceed 40 µm (ISO 8573-1, Class 5).

ACTUATECH S.p.A.
Via San Lorenzo, 70 - 25069 Villa Carcina (BS) – ITALY Tel. (+39) 0308908142 Fax (+39) 0308908143
http://www.actuatech.com e-mail: actuatech@actuatech.com